REV.	QTY	C O N T E N T S	DATE	DRAWN	APPROVED

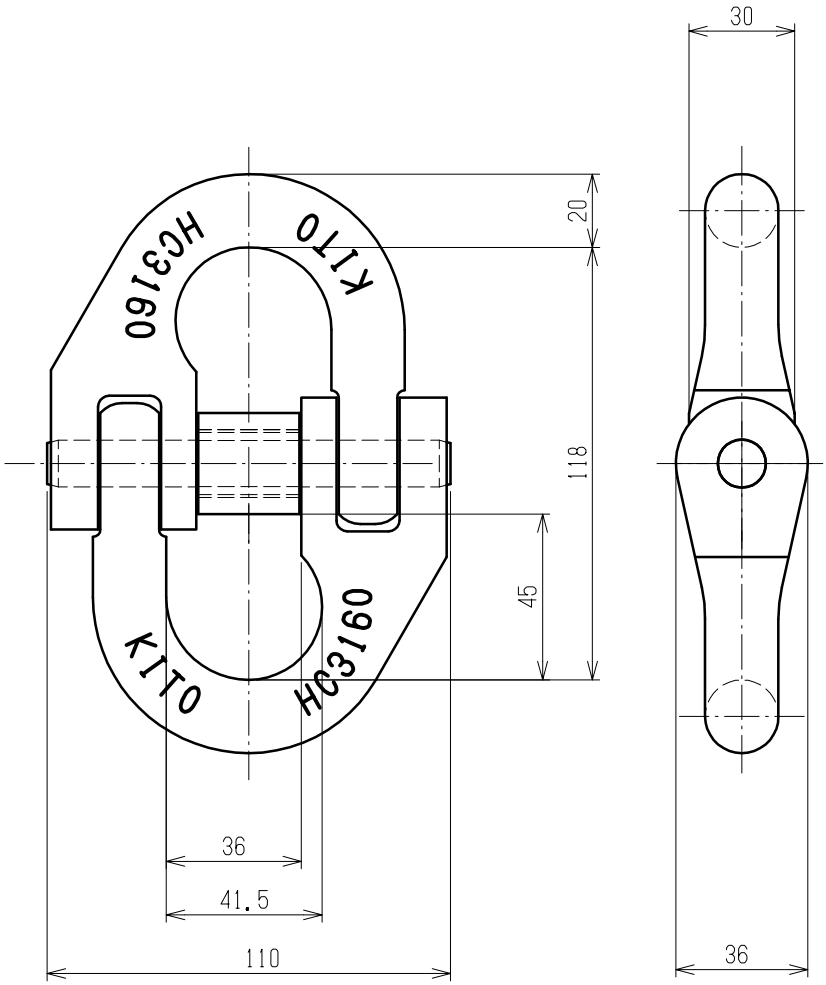

APPROVED	CHECKED	DESIGNED	DRAWN	TITLE			
T.Hatano	A.Naito	T.Ozawa	T.Ozawa	ハイカップリングイッシキ			
2015.01.27	2015.01.27	2015.01.27	2015.01.27	CODE	HC3160	SCALE	1:2
KITO				DWG.NO.	P4HC160-11211Z	REV.	

005M-19 Third angle projection UNIT : mm