?	?	KD2M-2.8T
?	?	KD-2M-2.8T-L20

LIFT 21M ??? ????? ??

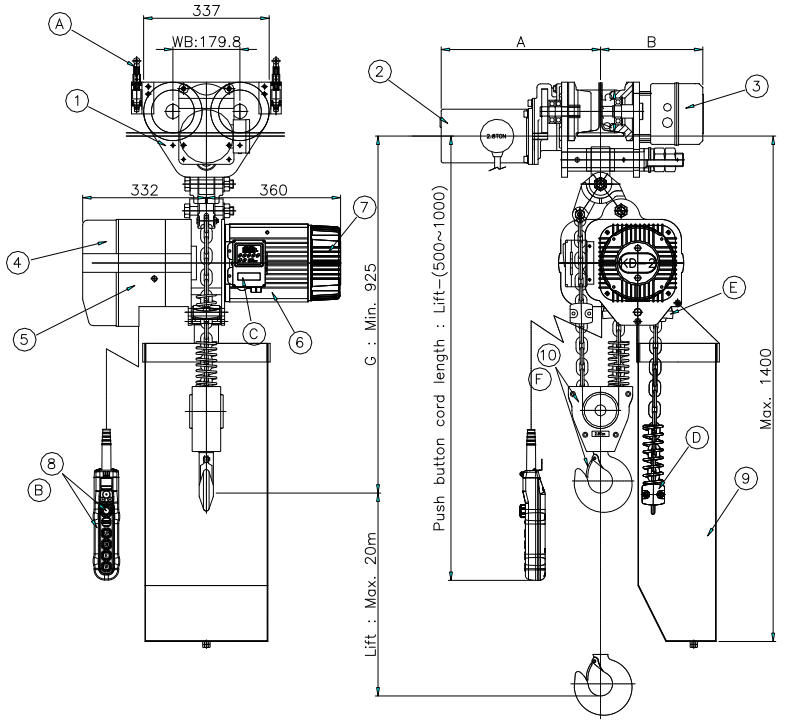

NO	DESCRIPTION	MATERIAL	Q'TY	SIZE	REMARK
1	KMT-ASS'Y	-	1		
2	Traversing Motor	-	1		
3	Traversing Box	-	1		
4	Control Panel	-	1		
5	Reducer-ASS'Y	-	1		
6	Motor	-	1		
7	Brake- ASS'Y	-	1		
8	Push Button S/W	-	1		
9	Chain Bucket	-	1		
10	Bottom Hook-ASS'Y	-	1		
SAFETY DEVICE					
A	LIMIT S/W	-	2		
B	EMERGENCY STOP BUTTON S/W	-	1		
C	O.L.P	-	1		
D	CHAIN STOP HOLDER	-	1		
E	?? ?? ??	-	1		
F	SAFETY LATCH	-	1		

CAPACITY		2.8 Ton
TEST LOAD		3.5 Ton
LIFT		Max. 20 m
HOISTING	MOTOR	3.3 kw x 4 poles
	SPEED	5.2 m/min
TRAVERSING	MOTOR	0.4 kw x 4 poles
	SPEED	12 m/min.(inverter : 2~12 m/min)
	MOTOR	0.4 kw x 4 poles
	SPEED	24 m/min.(inverter : 2~24 m/min)
	MOTOR	0.4/0.2 kw x 4/8 poles
	SPEED	12/6 m/min.
	MOTOR	0.4/0.2 kw x 4/8 poles
	SPEED	24/12 m/min.
BRAKE SYSTEM	HOISTING	MECHANICAL BRAKE
		DC ELECTRO MAGNETIC BRAKE
	TRAVERSING	AC SELF BRAKE (inverter DC ELECTRO MAG. BRAKE)
POWER SOURCES	MAIN	AC 3ø 220/380/440 460/480V 60Hz
	CONTROL	AC 1ø 48/110/120V 60Hz
OPERATION METHOD		PUSH BUTTON SWITCH TYPE ON FL.
PAINT COLOR		0.4 PB 4.2/5.6
BEAM SIZE		100, 125, 150
LOAD CHAIN		ø9.5 x P28.6mm x 2fall
NET WEIGHT		Max. 370 kg

I-BEAM	A	B
100	414	255
125	426.5	276
150	439	298

REV	DATE	DESCRIPTION	DRAWN	CHECK	APPRVD
A	29.MAY.2018	REDRAWING	K.H.Han	-	-

PROJECT

CLIENT

MANUFACTURER ?????? ???? KUKDONG HOIST CO., LTD.

TITLE ASSEMBLY DRAWING KD-2M-2.8T-L20

SCALE	DWG. NO.	SHT. NO.	REV.
-	-	-	-

?	?	KD2M-2.8T
?	?	KD-2M-2.8T-L55

LIFT 21M ??? ????? ??

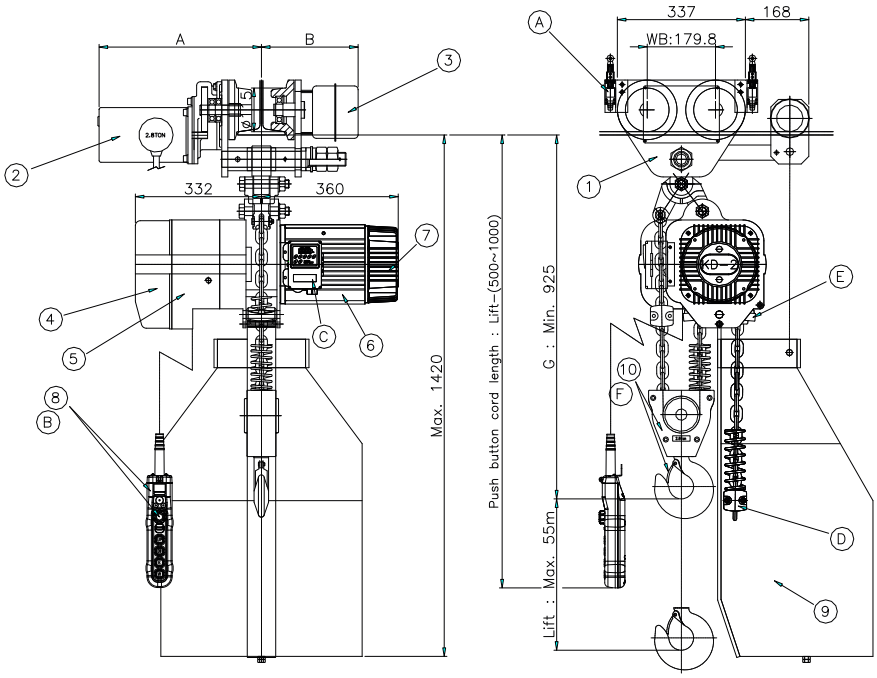

NO	DESCRIPTION	MATERIAL	Q'TY	SIZE	REMARK
1	KMT-ASS'Y	-	1		
2	Traversing Motor	-	1		
3	Traversing Box	-	1		
4	Control Panel	-	1		
5	Reducer-ASS'Y	-	1		
6	Motor	-	1		
7	Brake- ASS'Y	-	1		
8	Push Button S/W	-	1		
9	Chain Bucket	-	1		
10	Bottom Hook-ASS'Y	-	1		
SAFETY DEVICE					
A	LIMIT S/W	-	2		
B	EMERGENCY STOP BUTTON S/W	-	1		
C	O.L.P	-	1		
D	CHAIN STOP HOLDER	-	1		
E	?? ?? ??	-	1		
F	SAFETY LATCH	-	1		

CAPACITY		2.8 Ton
TEST LOAD		3.5 Ton
LIFT		Max. 55 m
HOISTING	MOTOR	3.3 kw x 4 poles
	SPEED	5.2 m/min
TRAVERSING	MOTOR	0.4 kw x 4 poles
	SPEED	12 m/min.(inverter : 2~12 m/min)
	MOTOR	0.4 kw x 4 poles
	SPEED	24 m/min.(inverter : 2~24 m/min)
	MOTOR	0.4/0.2 kw x 4/8 poles
	SPEED	12/6 m/min.
	MOTOR	0.4/0.2 kw x 4/8 poles
	SPEED	24/12 m/min.
BRAKE SYSTEM	HOISTING	MECHANICAL BRAKE
		DC ELECTRO MAGNETIC BRAKE
	TRAVERSING	AC SELF BRAKE (inverter DC ELECTRO MAG. BRAKE)
POWER SOURCES	MAIN	AC 3ø 220/380/440 460/480V 60Hz
	CONTROL	AC 1ø 48/110/120V 60Hz
OPERATION METHOD		PUSH BUTTON SWITCH TYPE ON FL.
PAINT COLOR		0.4 PB 4.2/5.6
BEAM SIZE		100, 125, 150
LOAD CHAIN		ø9.5 x P28.6mm x 2fall
NET WEIGHT		Max. 534 kg

I-BEAM	A	B
100	414	255
125	426.5	276
150	439	298

REV	DATE	DESCRIPTION	DRAWN	CHECK	APPRVD
A	29.MAY.2018	REDRAWING	K.H.Han	-	-

PROJECT

CLIENT

MANUFACTURER ?????? ???? KUKDONG HOIST CO., LTD.

TITLE ASSEMBLY DRAWING KD-2M-2.8T-L55

SCALE	DWG. NO.	SHT. NO.	REV.
-		-	-